FA 50 213 80

REF.	**FA 50 213 80**
CE	EN 362:2004 Class T
	23 kN / 85 mm
MAT.	STEEL
	DOUBLE ACTION
KEYLOCK	---
+	---
kg	0.84 KG

	MAT.	
Résistance à la rupture / Ouverture	**Matière**	**Type d'ouverture**
Breaking strength / Gate opening	Material	Opening system
Resistencia a la ruptura / Apertura	**Material**	**Tipo de apertura**
Resistenza alla rottura / Apertura	Materia	Sistema di apertura
Bruchfestigkeit / Öffnung	**Material**	**Öffnungssystem**

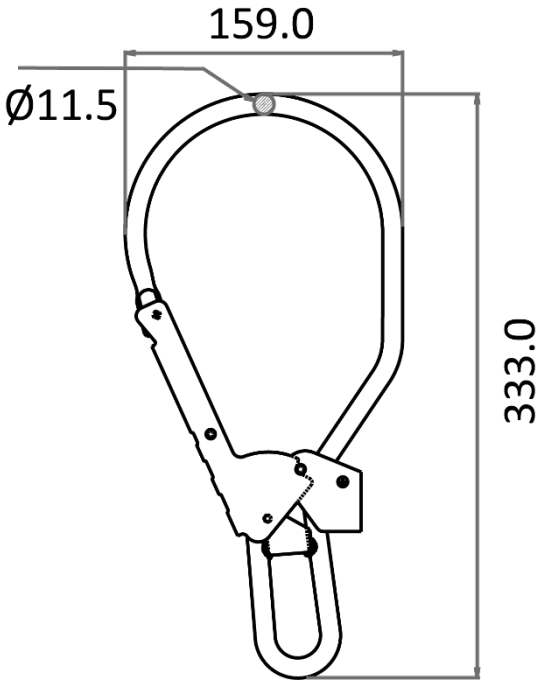

HS CODE
73269098
CARTON SIZE / PCS.
39x28x23/20
AET (EU) N°2777/10756-01/E01-01
Satra Technology Europe Ltd., N° 2777, Bracetown Business Park, Clonee, Dublin, D15YN2P, Ireland
MODULE D FI14/14003.02
SGS Fimko Oy, N°0598 Takomotie 8, 00380 HELSINKI, Finland
AET (UKCA) N°AB0321/16043-01/E01-01
Satra Technology Centre, N°0321 Wyndham Way, Telford Way, Kettering Northamptonshire, NN16 8SD, United Kingdom
MODULE D 11 IN14/14003
SGS United Kingdom Ltd., N°0120 Unit 202B, Worle Parkway, Weston-super-Mare, BS22 6WA, United Kingdom